IEC: Short-Circuit Example 1

Data Entry for SC

Objectives:

- Understand additional data required to run short-circuit analysis based on a system with all data entered for load flow analysis.
- Enter required data for IEC short-circuit analysis.

Steps:

1. Open the ETAP file – IEC_SCExample2\Example2-ST
2. Enter the following data to the components for SC calculations

Element	**Parameters**
Network Feeder	3-phase SC Rating: MVAsc = 8000, X/R = 18 1-Phase SC Rating: MVAsc =6000 , X/R = 14
Gen-1	Xd” = 18, Xd’ = 25, X2 = 16, Xo = 14, X/R = 50, Xd” Tolerance = 4.5 IEC Exciter Type = Turbine 130% PG = 5%
Aux-XFMR	Z Tolerance = 10%
All Ind Mtr	LRC already entered as typical data retrieved.
Lump1	90% Mtr Load; LRC = 600%, “High”; Typical X/R ration
Cable	For all branch/ equipment cables: Tmin = 40, Tmax = 90

3. Create two configurations:

Name	**Setup**	**Comment**
Normal	All PDs Closed	All elements are in operation.
Gen-Off	Open CB-Gen	Generator is down.

IEC: Short-Circuit Example 1

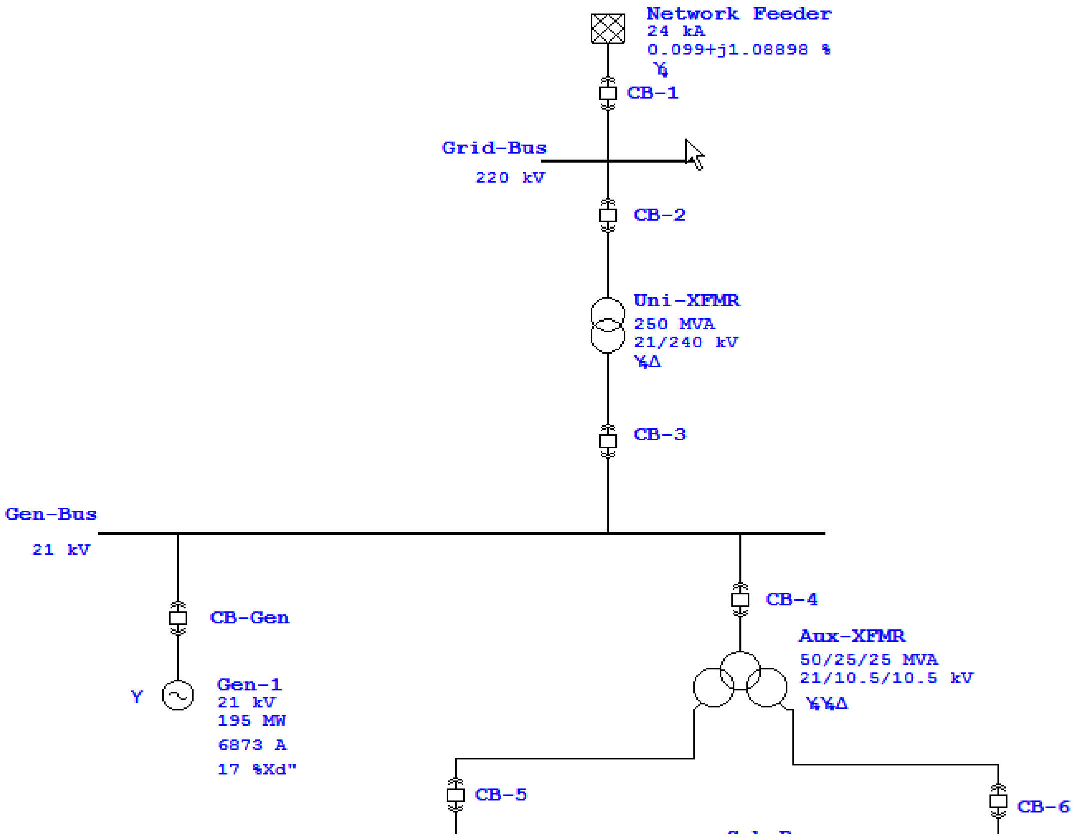

Network Feeder
24 kA
0.099+j1.08898 %
Y
CB-1
Grid-Bus
220 kV
CB-2
Uni-XFMR
250 MVA
21/240 kV
YΔ
CB-3
Gen-Bus
21 kV
CB-Gen
Y
Gen-1
21 kV
195 MW
6873 A
17 %Xd"
CB-4
Aux-XFMR
50/25/25 MVA
21/10.5/10.5 kV
YYΔ
CB-5
CB-6

Part I of the System

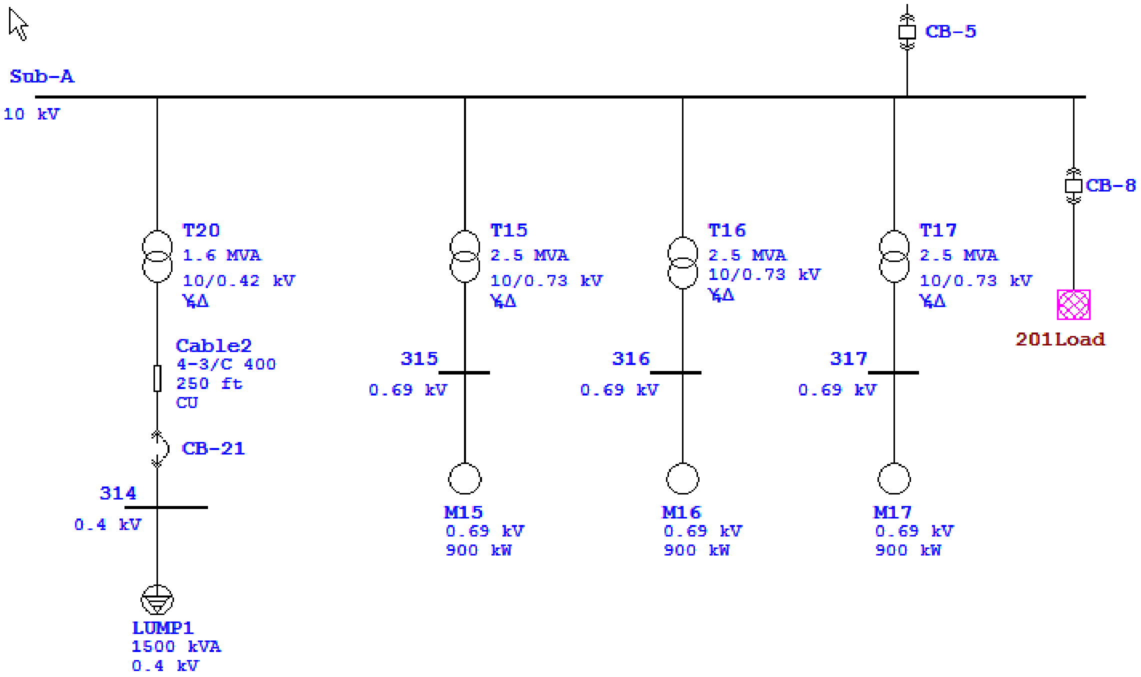

CB-5
Sub-A
10 kV
CB-8
T20
1.6 MVA
10/0.42 kV
YΔ
T15
2.5 MVA
10/0.73 kV
YΔ
T16
2.5 MVA
10/0.73 kV
YΔ
T17
2.5 MVA
10/0.73 kV
YΔ
201Load
Cable2
4-3/C 400
250 ft
CU
315
0.69 kV
316
0.69 kV
317
0.69 kV
CB-21
314
0.4 kV
M15
0.69 kV
900 kW
M16
0.69 kV
900 kW
M17
0.69 kV
900 kW
LUMP1
1500 kVA
0.4 kV

IEC: Short-Circuit Example 1

Part II of the System

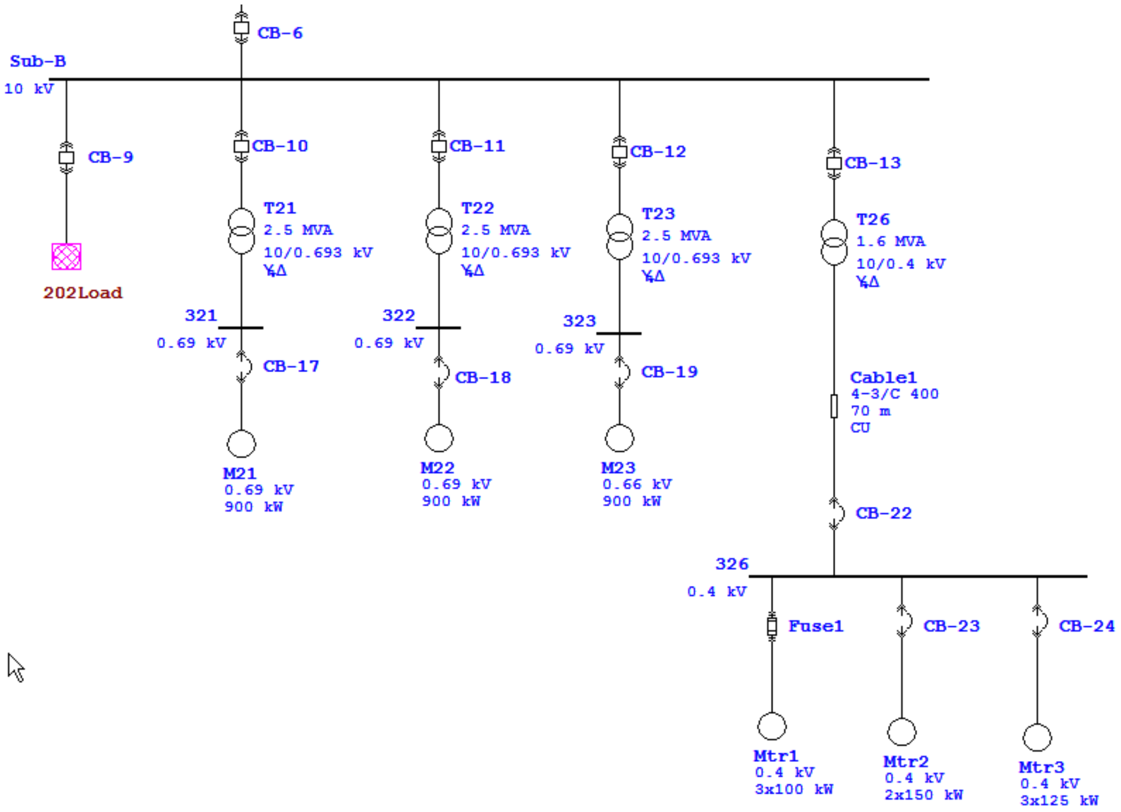
CB-6
Sub-B
10 kV
CB-9
202Load
CB-10
T21
2.5 MVA
10/0.693 kV
321
0.69 kV
CB-17
M21
0.69 kV
900 kW
CB-11
T22
2.5 MVA
10/0.693 kV
322
0.69 kV
CB-18
M22
0.69 kV
900 kW
CB-12
T23
2.5 MVA
10/0.693 kV
323
0.69 kV
CB-19
M23
0.66 kV
900 kW
CB-13
T26
1.6 MVA
10/0.4 kV
Cable1
4-3/C 400
70 m
CU
CB-22
326
0.4 kV
Fuse1
CB-23
CB-24
Mtr1
0.4 kV
3x100 kW
Mtr2
0.4 kV
2x150 kW
Mtr3
0.4 kV
3x125 kW

Part III of the System

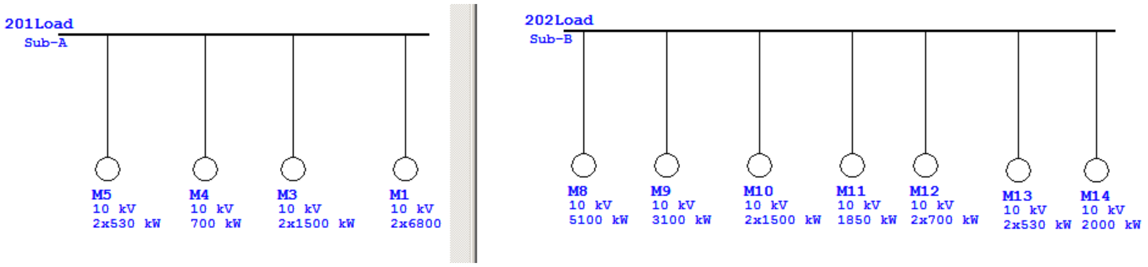
201Load
Sub-A
M5
10 kV
2x530 kW
M4
10 kV
700 kW
M3
10 kV
2x1500 kW
M1
10 kV
2x6800
202Load
Sub-B
M8
10 kV
5100 kW
M9
10 kV
3100 kW
M10
10 kV
2x1500 kW
M11
10 kV
1850 kW
M12
10 kV
2x700 kW
M13
10 kV
2x530 kW
M14
10 kV
2000 kW

Composite Motor – 201 Load & 202 Load

Running SC Calculations

Objectives:

- Running IEC 3-Phase Device Duty and 60909 Short-Circuit Calculations.
- Review results from OLV display and report.

Steps:

ETAP File – Same file as Example 1 (IEC_SCExample2\Example2-ST)

1. Set up two study cases

- Study Case: FltGenBus – Enter parameters as follows (skip Arc Flash page)

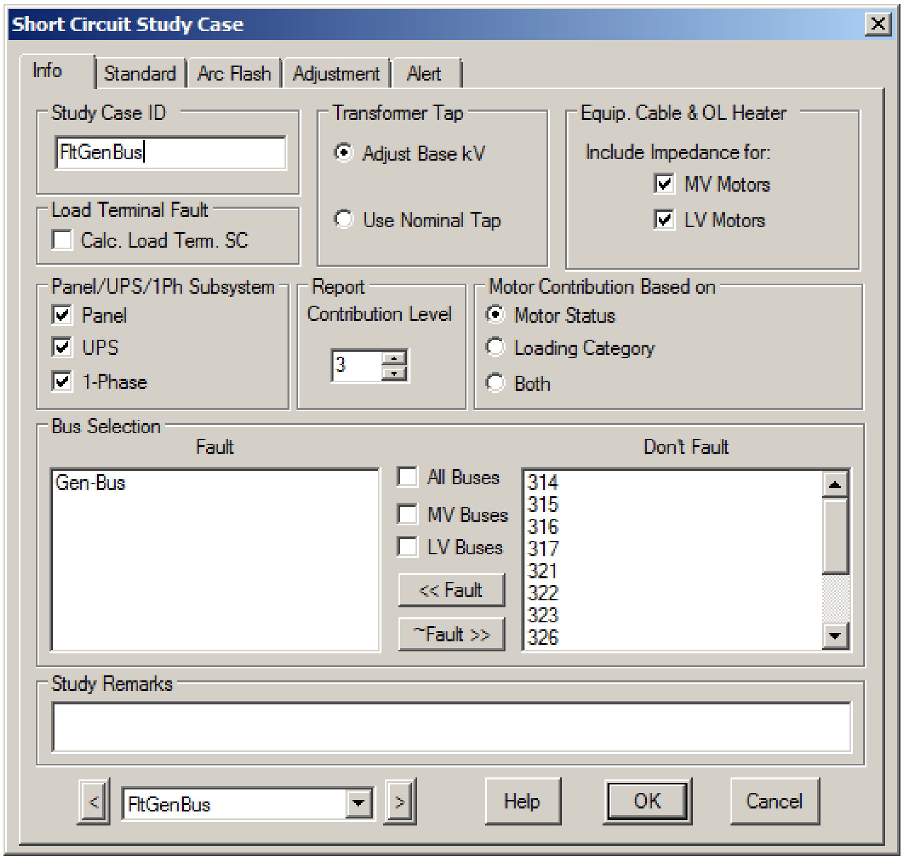

Short Circuit Study Case

Study Case ID: FltGenBus

Transformer Tap: ● Adjust Base kV ○ Use Nominal Tap

Equip. Cable & OL Heater – Include Impedance for: ☑ MV Motors ☑ LV Motors

Load Terminal Fault: ☐ Calc. Load Term. SC

Panel/UPS/1Ph Subsystem: ☑ Panel ☑ UPS ☑ 1-Phase

Report – Contribution Level: 3

Motor Contribution Based on: ● Motor Status ○ Loading Category ○ Both

Bus Selection

Fault: Gen-Bus

☐ All Buses ☐ MV Buses ☐ LV Buses

Don't Fault: 314, 315, 316, 317, 321, 322, 323, 326

Study Remarks:

Short-Circuit Example 2

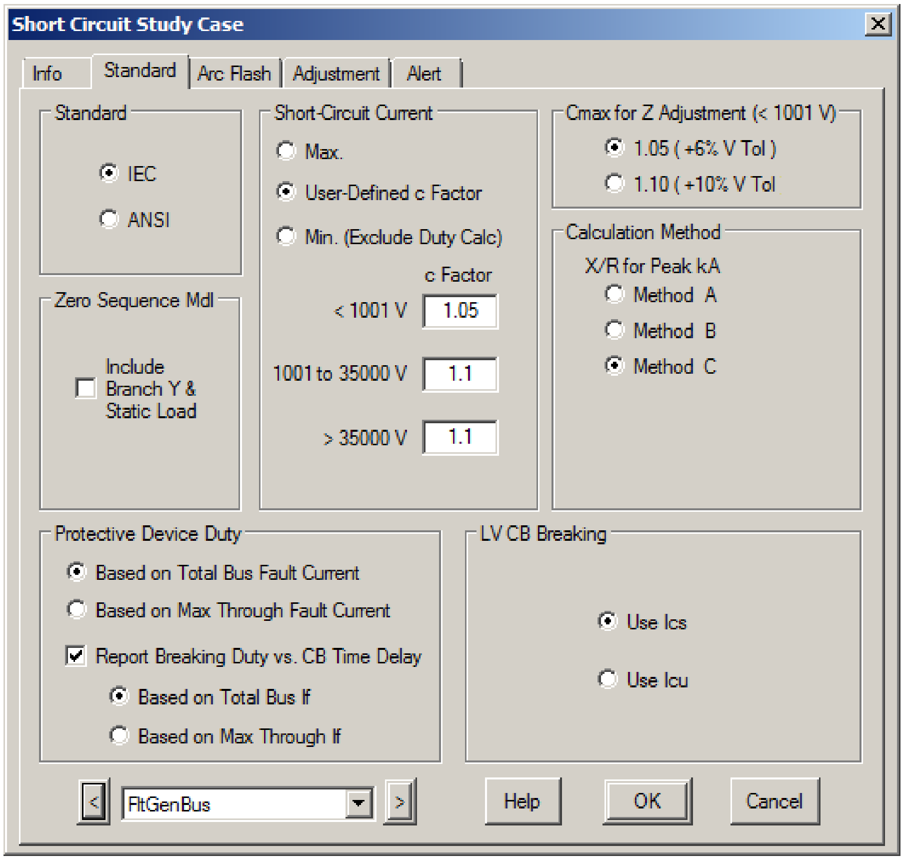

Short Circuit Study Case

Info | Standard | Arc Flash | Adjustment | Alert

Standard
- ● IEC
- ○ ANSI

Zero Sequence Mdl
- ☐ Include Branch Y & Static Load

Short-Circuit Current
- ○ Max.
- ● User-Defined c Factor
- ○ Min. (Exclude Duty Calc)

c Factor
- < 1001 V: 1.05
- 1001 to 35000 V: 1.1
- > 35000 V: 1.1

Cmax for Z Adjustment (< 1001 V)
- ● 1.05 (+6% V Tol)
- ○ 1.10 (+10% V Tol

Calculation Method

X/R for Peak kA
- ○ Method A
- ○ Method B
- ● Method C

Protective Device Duty
- ● Based on Total Bus Fault Current
- ○ Based on Max Through Fault Current
- ☑ Report Breaking Duty vs. CB Time Delay
  - ● Based on Total Bus If
  - ○ Based on Max Through If

LV CB Breaking
- ● Use Ics
- ○ Use Icu

FltGenBus

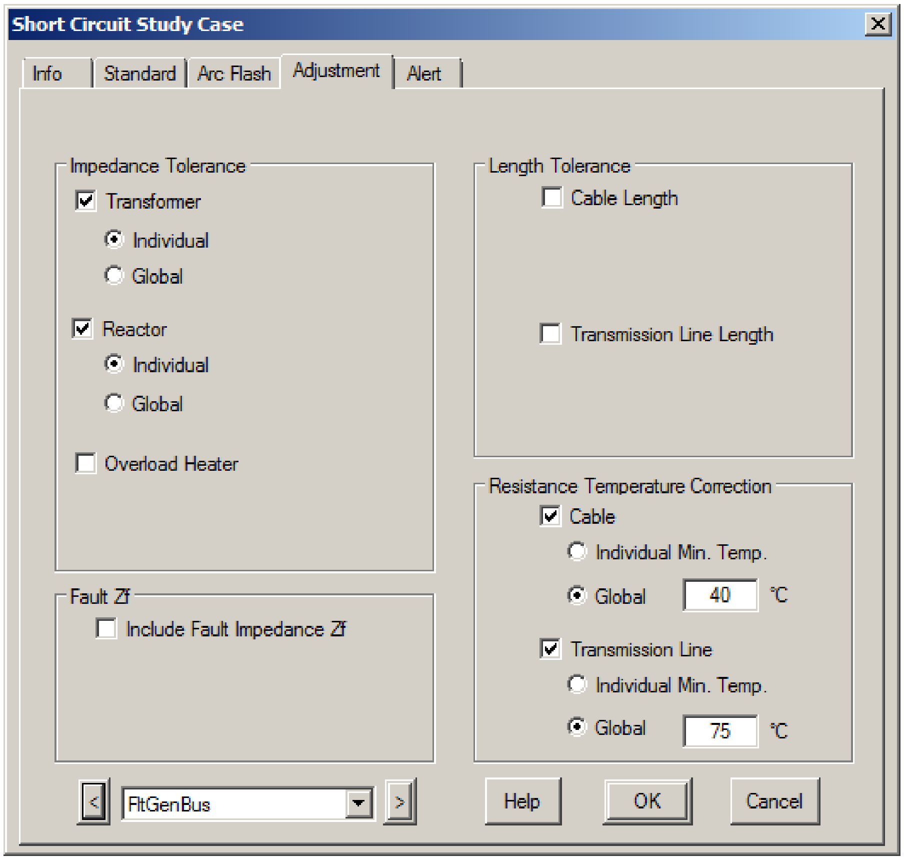

Short Circuit Study Case

Info | Standard | Arc Flash | Adjustment | Alert

Impedance Tolerance
- ☑ Transformer
  - ● Individual
  - ○ Global
- ☑ Reactor
  - ● Individual
  - ○ Global
- ☐ Overload Heater

Fault Zf
- ☐ Include Fault Impedance Zf

Length Tolerance
- ☐ Cable Length
- ☐ Transmission Line Length

Resistance Temperature Correction
- ☑ Cable
  - ○ Individual Min. Temp.
  - ● Global 40 °C
- ☑ Transmission Line
  - ○ Individual Min. Temp.
  - ● Global 75 °C

FltGenBus

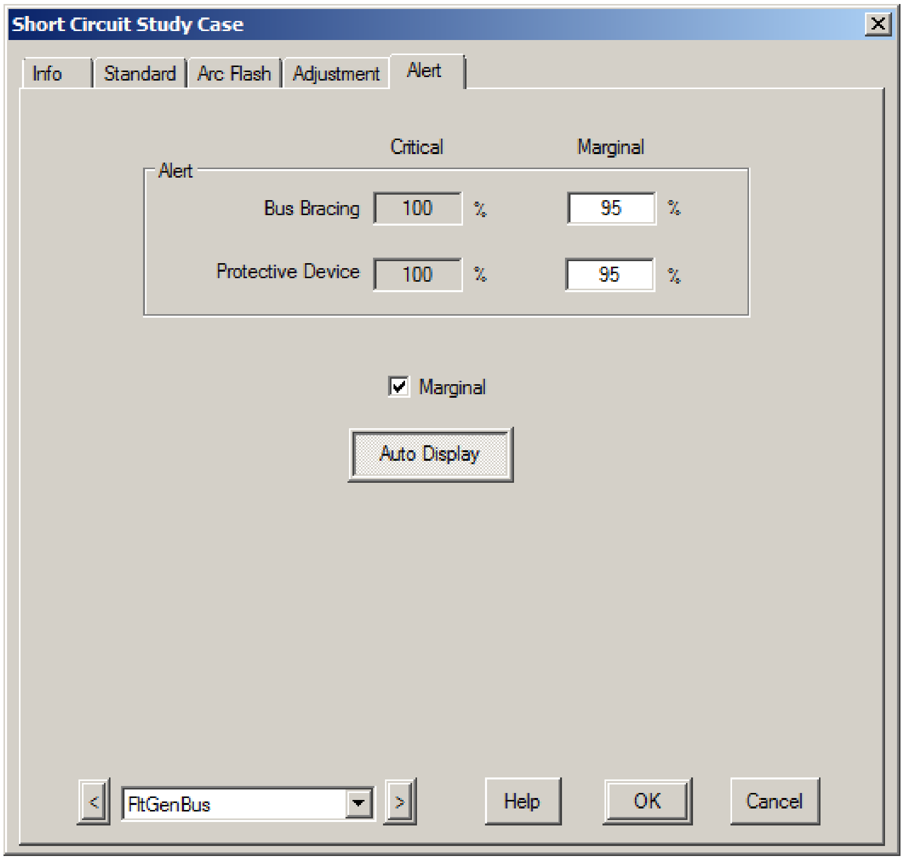
Short Circuit Study Case
Info
Standard
Arc Flash
Adjustment
Alert
Auto Display
<
>
Help
OK
Cancel

Alert

	Critical		Marginal	
Bus Bracing	100	%	95	%
Protective Device	100	%	95	%

☑ Marginal

FltGenBus

- Study Case: FltAllBus – Enter parameters as follows (skip Arc Flash page)

  All parameters of the study case are the same as that of FltGenBus, except that all the buses in the system are faulted.

2. Run Device Duty calculation
   - Study Case – FltGenBus
   - Configuration – Normal
   - Run 3-Phase Device Duty Calculation
   - Check OLV display (Where and how can you set OLV display?)
   - Check report

3. Run Device Duty calculation
   - Study Case – FltAllBus
   - Configuration – Normal
   - Run Device Duty Calculation
   - Check OLV display – Compare OLV display against that given in step 2.
   - Check report

4. Run Device Duty calculation with different options in the study case
   - Create two study cases:

  - FltAllBusMax – Enter parameters as follows (skip Arc Flash page)

    All parameters of the study case are the same as that of FltAllBus, except that in the Short-Circuit Current section of the Standard page, the Max option is selected.

  - FltAllBusMin – Enter parameters as follows (skip Arc Flash page)

    All parameters of the study case are the same as that of FltAllBus, except that in the Short-Circuit Current section of the Standard page, the Min option is selected.

- Configuration – Normal
- Run Device Duty Calculation for study case FltAllBusMax.
- Check OLV display – Compare results in this case with that in step 3.
- Check report

5. Questions:

- Which study case results in the worst SC currents?
- When each study case should be used?
- Which configuration results in the worst SC current?

Short-Circuit Example 3

Verify and Size Equipment Rating

Objectives:

- Use ETAP to verify and size equipment rating for bus and protective devices.

Steps:

ETAP File – Same file as Example 2 (IEC_SCExample2\Example2-ST)

1. Factors that change short-circuit current
    - System Configuration – PD status and Load configurations
    - Data Revision
    - Study Case Options – c factor, etc.
    - Device Operating Parameters – Delay time, etc.

2. Verify devices with existing settings
    - Bus – Grid-Bus, Sub-A, & 314
    - PD – CB-1, CB-2, CB-3, & CB-21
    - Are there any problems with the existing settings? If yes, try to fix them.
    - Run SC with the configuration and study case that give the worst case.

3. Select rating/size for some devices
    - Bus –Gen-Bus, Sub-B & 326
    - PD – CB-Gen, CB-4, & CB-22
    - Run SC with the configuration and study case that give the worst case.

Suggested Ratings for Some Components

Element	**Parameters**
Buses	
Gen Bus	Switchgear, 6000 Amp, 220 kA
Sub-B	Switchgear, 1600 Amp, 75 kA
326	MCC, 2500 Amp, 95 kA
PDs	
CB-Gen	Siemens, 36-3AH-40m 6300 amp, 0.06 Sec., 170kA Making, 63kA Breaking
CB-4	Siemens, 420-3AT4-80, 4000 Amp, 0.06 Sec., 253 kA Making, 100kA Braking
CB-22	ABB, E3H, Size 2500, 0.44 kV

4. Select rating/size for some devices
   - Bus –321, 322, 323
   - PD – CB-10, CB-11, CB-12, CB-13, CB-17, CB-18, CB-19, Fuse1, CB-23, CB-24
   - Run SC with the configuration and study case that give the worst case.

Suggested Ratings for Some Components

Element	**Parameters**
Buses	
321, 322, 323	MCC, 2500 Amp, 100 kA
PDs	
CB-10, 11, 12	Siemens, 15-3AF—31.5, 2500 Amp, 0.052 delay, 80kA Making, 31.5kA Breaking
CB-13	Siemens, 36-3AF-31.5, 2500 Amp, 0.052 delay, 80kA Making, 31.5kA Breaking
CB-17,18,19	ABB, E3H, Size 3200, 0.69 kV, 0.03 Delay 187kA Making, 85kA Breaking
Fuse1	ABB, OFAM 2, 0.69 kV, 200 A, 100 kA
CB-23, 24	ABB, E2N, Size 1250, 0.44 kV, 143 Making, 65 Breaking

Short-Circuit Example 4

Unbalanced SC Calculation

Objectives:

- Use ETAP to verify and size equipment rating for bus and protective devices.

Steps:

ETAP File – Same file as Example 2 (IEC_SCExample2\Example2-ST)

1. Set up Ground Connection
   - Set up layered protection – XFMR Delta on source side and Y grounded on load side.
   - 220 kV – Solid grounded
   - 10 kV – 100 Amp Resistance grounding
   - 6.9 & 0.4 kV – Delta/Y solid-grounded
   - Utility & Generator – Solid grounded
   - All loads – ungrounded

2. Run unbalanced calculations using existing configuration and study cases

3. Check Result
   - Check result on OLV – change display option to show different fault calculation results.
   - Check result on crystal report.
   - Check effect of grounding connection type and value on zero sequence current.